EC 20 flat brushless, 5 Watt, with integrated electronics

1-Q-speed controller

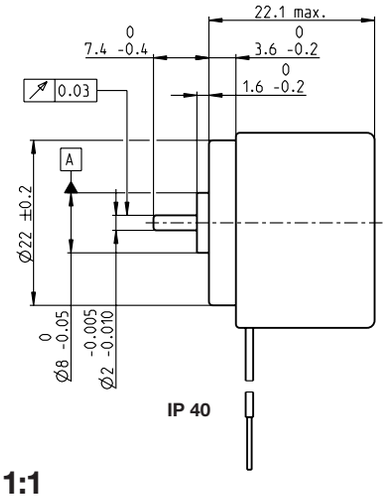

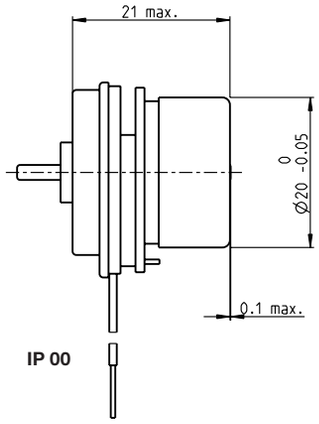

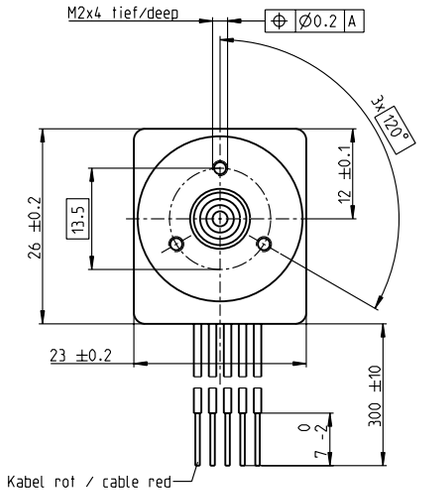

M 1:1

Stock program
Standard program
Special program (on request)

Part Numbers

	2 wire version		5 wire version Enable	5 wire version Direction
IP 40 (with cover)	350834	350835	350806	370416
IP 00 (without cover)	350804	350805	349731	370415

Motor Data

	Values at nominal voltage					
1	Nominal voltage	V	24	24	24	24
2	No load speed	rpm	3000	6000	6000	6000
3	No load current	mA	18.6	32.9	32.9	32.9
4	Nominal speed	rpm	3000	6000	6000	6000
5	Nominal torque (max. continuous torque)	mNm	7.45	7.31	7.31	7.31
6	Nominal current (max. continuous current)	A	0.263	0.377	0.377	0.377
33	Max. torque	mNm	13.2	13.2	13.2	13.2
34	Max. current	A	0.73	0.73	0.73	0.73
9	Max. efficiency	%	44	54	54	54
	Characteristics					
35	Type of control		Speed	Speed	Speed	Speed
36	Supply voltage $+V_{CC}$	V	10…28	10…28	10…28	10…28
37	Speed set value input	V	= V_{CC}	= V_{CC}	0.33…10.8	0.33…10.8
38	Scale speed set value input	rpm/V	125	250	600	600
39	Speed range	rpm	1250…3500	2500…7000	200…6480	200…6480
40	Max. acceleration	rpm/s	3000	6000	6000	6000

Specifications

	Thermal data	
17	Thermal resistance housing-ambient	10.6 K/W
18	Thermal resistance winding-housing	5.32 K/W
19	Thermal time constant winding	3.66 s
20	Thermal time constant motor	13.9 s
21	Ambient temperature	-40…+85°C
22	Max. winding temperature	+125°C
41	Max. temperature of electronics	+105°C
	Mechanical data (preloaded ball bearings)	
16	Rotor inertia	5.1 gcm²
24	Axial play at axial load < 2.0 N	0 mm
	> 2.0 N	0.14 mm
25	Radial play	preloaded
26	Max. axial load (dynamic)	1.8 N
27	Max. force for press fits (static)	26 N
	(static, shaft supported)	200 N
28	Max. radial load, 5 mm from flange	12 N
	Other specifications	
31	Weight of motor	37 g
32	Direction of rotation	Clockwise (CW)

Values listed in the table are nominal.

Protective functions
Overload protection, blockage protection, inverse-polarity protection, thermal overload protection, low/high voltage cut-off

Connection 2 wire version (Cable AWG 28)
red $+V_{CC}$ 10…28 VDC
black GND

Connection 5 wire version (Cable AWG 28)
red $+V_{CC}$ 10…28 VDC
black GND
white Speed set value input
green Monitor n (6 pulses per revolution)
grey Disable (Type Enable) or sense of direction (Type Direction)

Operating Range

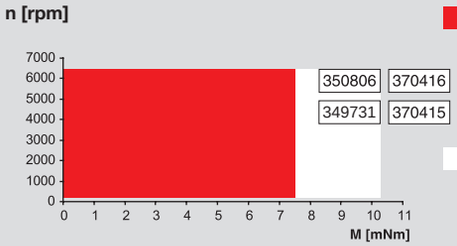

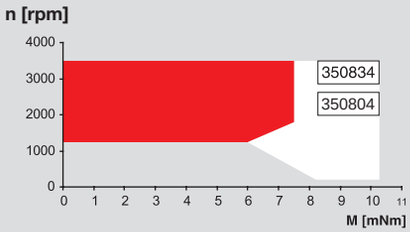

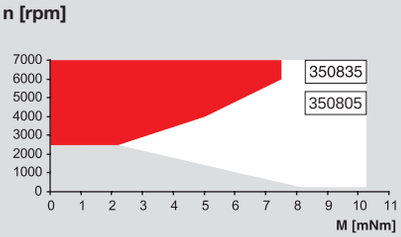

Comments

Continuous operation
The drive can be operated with a speed controller and, taking account of the given thermal resistance (fig. 17 and 18) at an ambient temperature of 25°C, does not exceed the maximum permissible operating temperatures.

Overload range
The drive reaches these operating points. Speed may vary from the set value. The overload protection shuts down the drive in the event of sustained overload.

maxon Modular System

Overview on page 20–27

Spur Gearhead
∅20.3 mm
0.06 - 0.25 Nm
Page 326
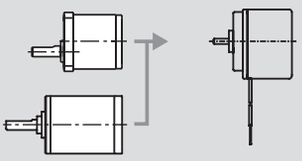
Planetary Gearhead
∅22 mm
0.5 - 2.0 Nm
Page 329/332