EC 32 ∅32 mm, brushless, 80 Watt

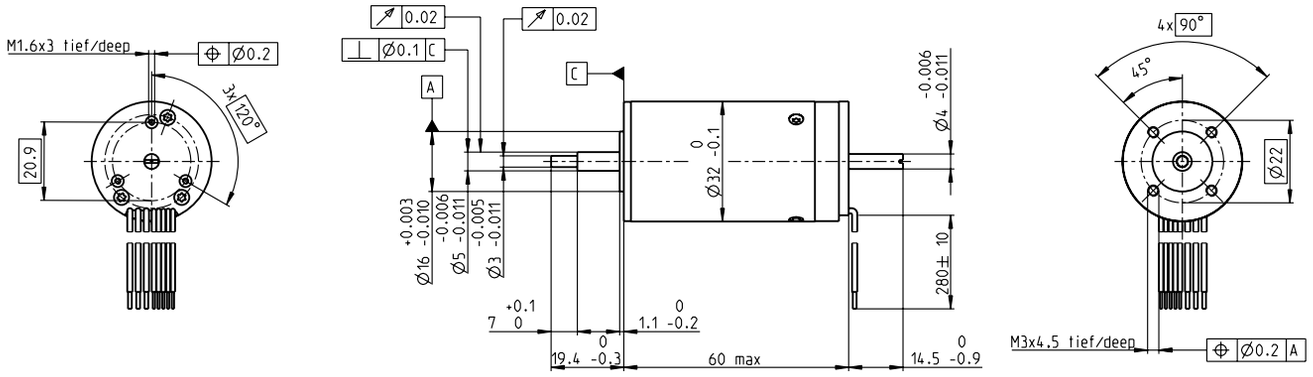

M 1:2

Stock program
Standard program
Special program (on request)

Part Numbers

	118891	118892	118888	118889	118893	118890
Motor Data						
Values at nominal voltage						
1 Nominal voltage V	12	18	18	24	36	48
2 No load speed rpm	15100	14300	13100	11000	14700	11300
3 No load current mA	662	404	349	199	211	104
4 Nominal speed rpm	13400	12700	11500	9450	13200	9740
5 Nominal torque (max. continuous torque) mNm	44.6	45.2	45.9	47.2	43.8	45.9
6 Nominal current (max. continuous current) A	6.51	4.15	3.82	2.46	2.07	1.23
7 Stall torque mNm	428	443	407	355	454	353
8 Stall current A	57.2	37.4	31.4	17.3	19.7	8.84
9 Max. efficiency %	80	81	81	80	81	80
Characteristics						
10 Terminal resistance phase to phase Ω	0.21	0.481	0.573	1.39	1.83	5.43
11 Terminal inductance phase to phase mH	0.03	0.0752	0.09	0.226	0.285	0.856
12 Torque constant mNm/A	7.48	11.8	13	20.5	23.1	40
13 Speed constant rpm/V	1280	806	737	465	414	239
14 Speed/torque gradient rpm/mNm	35.8	32.7	32.6	31.5	32.8	32.5
15 Mechanical time constant ms	7.49	6.86	6.82	6.59	6.87	6.8
16 Rotor inertia gcm^2	20	20	20	20	20	20

Specifications

Thermal data

17	Thermal resistance housing-ambient	5.4 K/W
18	Thermal resistance winding-housing	2.5 K/W
19	Thermal time constant winding	14.8 s
20	Thermal time constant motor	1180 s
21	Ambient temperature	-20…+100°C
22	Max. winding temperature	+125°C

Mechanical data (preloaded ball bearings)

23	Max. speed[1]	25000 rpm
24	Axial play at axial load < 8 N	0 mm
	> 8 N	max. 0.14 mm
25	Radial play	preloaded
26	Max. axial load (dynamic)	5.6 N
27	Max. force for press fits (static)	98 N
	(static, shaft supported)	1200 N
28	Max. radial load, 5 mm from flange	28 N

Other specifications

29	Number of pole pairs	1
30	Number of phases	3
31	Weight of motor	270 g

Values listed in the table are nominal.

Connection motor (Cable AWG 22)

red	Motor winding 1
black	Motor winding 2
white	Motor winding 3

Connection sensors (Cable AWG 26)[1]

green	V_{Hall} 4.5…24 VDC
blue	GND
red/grey	Hall sensor 1
black/grey	Hall sensor 2
white/grey	Hall sensor 3

Wiring diagram for Hall sensors see p. 35

[1] Not lead through in combination with resolver.

Operating Range

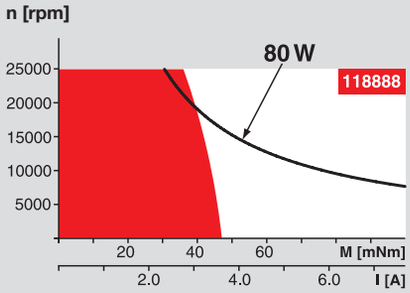

Comments

Continuous operation
In observation of above listed thermal resistance (lines 17 and 18) the maximum permissible winding temperature will be reached during continuous operation at 25°C ambient.
= Thermal limit.

Short term operation
The motor may be briefly overloaded (recurring).

Assigned power rating

maxon Modular System

Overview on page 20–27

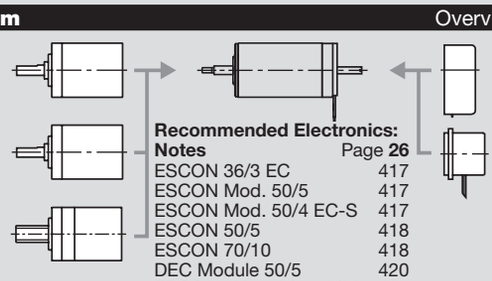

Planetary Gearhead
∅32 mm
0.75 - 4.5 Nm
Page 338

Planetary Gearhead
∅32 mm
0.75 - 6.0 Nm
Page 340–344

Spindle Drive
∅32 mm
Page 370–372

Recommended Electronics:

Notes	Page 26
ESCON 36/3 EC	417
ESCON Mod. 50/5	417
ESCON Mod. 50/4 EC-S	417
ESCON 50/5	418
ESCON 70/10	418
DEC Module 50/5	420
EPOS2 24/5, 50/5, 70/10	425
EPOS2 P 24/5	428
EPOS2 Module 36/2	424
EPOS4 Module 50/8	431
EPOS4 Comp. 50/8 CAN	431
MAXPOS 50/5	435

Encoder HED_5540
500 CPT,
3 channels
Page 400/403

Resolver Res 26
∅26 mm
10 V
Page 412