DCX 22 L Precious Metal Brushes
DC motor Ø22 mm

11/20 W 29.8 mNm 7160 rpm

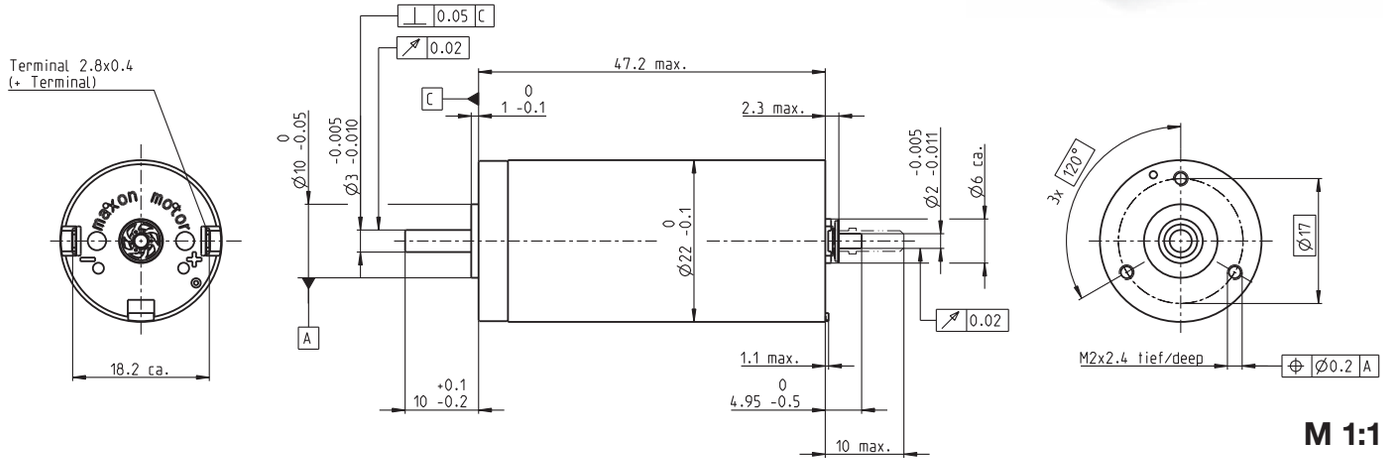

M 1:1

	Motor Data								
1_	Nominal voltage	V	6	9	12	18	24	36	48
2_	No load speed	rpm	5870	5870	4980	5740	5060	6020	5220
3_	No load current	mA	51.0	34	20.0	16.4	10.2	8.82	5.36
4_	Nominal speed	rpm	5380	5210	4000	4780	4070	5040	4180
5_	Nominal torque (max. continuous torque)	mNm	14.1	21.4	29.5	29.8	29.2	29.2	27.8
6_	Nominal current (max. continuous current)	A	1.50	1.50	1.30	1.01	0.655	0.520	0.322
7_	Stall torque	mNm	170	191	150	178	150	180	140
8_	Stall current	A	17.5	13.1	6.54	5.97	3.31	3.16	1.60
9_	Max. efficiency	%	89	90	89	90	89	90	89
10_	Terminal resistance	Ω	0.343	0.687	1.84	3.01	7.25	11.4	29.9
11_	Terminal inductance	mH	0.035	0.078	0.192	0.326	0.746	1.19	2.80
12_	Torque constant	mNm/A	9.73	14.6	22.9	29.9	45.2	57.0	87.6
13_	Speed constant	rpm/V	981	654	416	320	211	168	109
14_	Speed/torque gradient	rpm/mNm	34.6	30.8	33.3	32.2	33.9	33.5	37.3
15_	Mechanical time constant	ms	3.28	3.17	3.14	3.13	3.14	3.14	3.17
16_	Rotor inertia	gcm^2	9.06	9.82	9.00	9.26	8.85	8.94	8.12

	Thermal data		
17_	Thermal resistance housing-ambient	K/W	13.6
18_	Thermal resistance winding-housing	K/W	4.57
19_	Thermal time constant winding	s	22
20_	Thermal time constant motor	s	646
21_	Ambient temperature ball bearings	°C	-40…+85
	Ambient temperature sleeve bearings	°C	-30…+85
22_	Max. winding temperature	°C	100
	Mechanical data ball bearings		
23_	Max. speed	rpm	7160
24_	Axial play	mm	0…0.1
	Preload	N	2.5
25_	Radial play	mm	0.02
26_	Max. axial load (dynamic)	N	2.5
27_	Max. force for press fits (static)	N	30
	(static, shaft supported)	N	440
28_	Max. radial load [mm from flange]	N	16 [5]
	Mechanical data sleeve bearings		
23_	Max. speed	rpm	7160
24_	Axial play	mm	0…0.2
	Preload	N	0
25_	Radial play	mm	0.02
26_	Max. axial load (dynamic)	N	0.1
27_	Max. force for press fits (static)	N	80
	(static, shaft supported)	N	440
28_	Max. radial load [mm from flange]	N	3 [5]
	Other specifications		
29_	Number of pole pairs		1
30_	Number of commutator segments		9
31_	Weight of motor	g	95
32_	Typical noise level	dBA	52

Operating Range

n [rpm] Winding 18 V

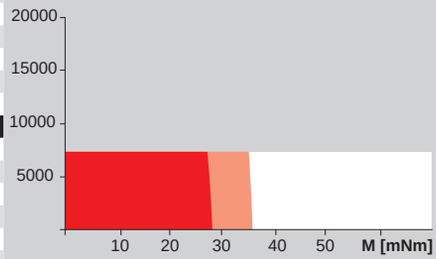

- Continuous operation
- Continuous operation with reduced thermal resistance R_{th2} 50%
- Intermittent operation

maxon Modular System

maxon gear	Stages	maxon sensor	maxon motor control
130_GPX 22 A/C	1–2	146_ENX 10 QUAD	416_ESCON Module 24/2
131_GPX 22 LN/LZ	1–2	147_ENX 16 EASY	416_ESCON 36/2 DC
132_GPX 22 HP	2–3	148_ENX 16 EASY Abs.	417_ESCON Module 50/5
134_GPX 26 A/C	3	396_ENC SCH16F	418_ESCON 50/5
135_GPX 26 LN/LZ	3	404_ENC 30 HEDL 5540	424_EPOS2 24/2 (DC/EC)
136_GPX 26 HP	4	407_ENC AEDL 5810	424_EPOS2 Module 36/2
			425_EPOS2 50/5
			428_EPOS2 P 24/5
			435_MAXPOS 50/5

Configuration

Bearing: Ball bearings preloaded/sleeve bearings
Commutation: Precious metal brushes with or without CLL/graphite brushes/EMI filter
Flange front/back: Standard flange/configurable flange/no flange
Shaft front/back: Length/diameter/flat face
Electric connection: Terminals or cable/alignment of connection/cable length/connector type

xdrives.maxonmotor.com