DCX 22 S Precious Metal Brushes
DC motor Ø22 mm

6/10 W 14.5 mNm 7160 rpm

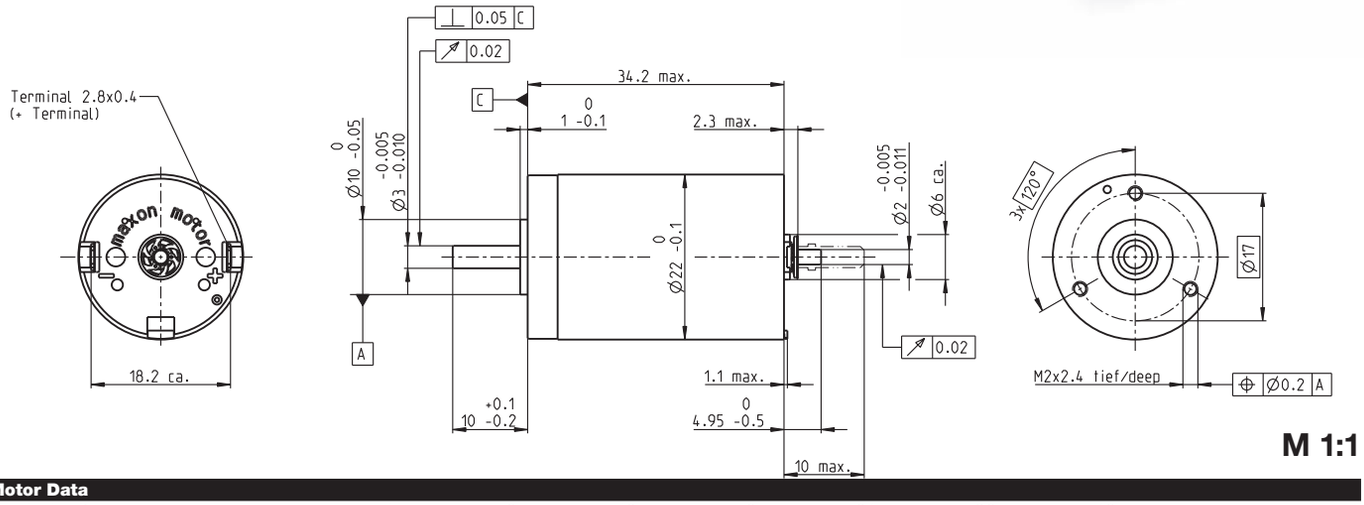

M 1:1

	Motor Data							
1_	Nominal voltage	V	6	12	18	24	36	48
2_	No load speed	rpm	6200	6200	6110	6340	6550	5890
3_	No load current	mA	39.2	19.6	12.8	10.1	7.09	4.55
4_	Nominal speed	rpm	4960	4670	4560	4700	4940	4240
5_	Nominal torque (max. continuous torque)	mNm	10.7	14.7	14.5	13.6	13.8	13.6
6_	Nominal current (max. continuous current)	A	1.20	0.817	0.531	0.388	0.272	0.180
7_	Stall torque	mNm	53.7	59.7	57.5	52.7	56.5	48.6
8_	Stall current	A	5.85	3.25	2.06	1.47	1.08	0.63
9_	Max. efficiency	%	84	85	85	84	85	84
10_	Terminal resistance	Ω	1.02	3.69	8.75	16.3	33.3	76.2
11_	Terminal inductance	mH	0.058	0.231	0.535	0.881	1.86	4.08
12_	Torque constant	mNm/A	9.18	18.4	28.0	35.9	52.2	77.2
13_	Speed constant	rpm/V	1040	520	342	266	183	124
14_	Speed/torque gradient	rpm/mNm	116	104	107	121	117	122
15_	Mechanical time constant	ms	6.14	6.07	6.09	5.93	6.15	6.19
16_	Rotor inertia	gcm^2	5.05	5.55	5.44	4.67	5.03	4.84

	Thermal data		
17_	Thermal resistance housing-ambient	K/W	16
18_	Thermal resistance winding-housing	K/W	7
19_	Thermal time constant winding	s	20
20_	Thermal time constant motor	s	528
21_	Ambient temperature ball bearings	°C	-40…85
	Ambient temperature sleeve bearings	°C	-30…85
22_	Max. winding temperature	°C	100
	Mechanical data ball bearings		
23_	Max. speed	rpm	7160
24_	Axial play	mm	0…0.1
	Preload	N	2.5
25_	Radial play	mm	0.02
26_	Max. axial load (dynamic)	N	2.5
27_	Max. force for press fits (static)	N	30
	(static, shaft supported)	N	440
28_	Max. radial load [mm from flange]	N	16 [5]
	Mechanical data sleeve bearings		
23_	Max. speed	rpm	7160
24_	Axial play	mm	0…0.2
	Preload	N	0
25_	Radial play	mm	0.02
26_	Max. axial load (dynamic)	N	0.1
27_	Max. force for press fits (static)	N	80
	(static, shaft supported)	N	440
28_	Max. radial load [mm from flange]	N	3 [5]
	Other specifications		
29_	Number of pole pairs		1
30_	Number of commutator segments		9
31_	Weight of motor	g	66
32_	Typical noise level	dBA	48

Operating Range

n [rpm] Winding 18 V

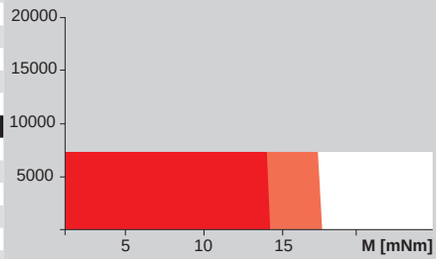

- Continuous operation
- Continuous operation with reduced thermal resistance R_{th2} 50%
- Intermittent operation

maxon Modular System

maxon gear	Stages	maxon sensor	maxon motor control
130_GPX 22 A/C	1–2	146_ENX 10 QUAD	416_ESCON Module 24/2
131_GPX 22 LN/LZ	1–2	147_ENX 16 EASY	416_ESCON 36/2 DC
132_GPX 22 HP	2–3	148_ENX 16 EASY Abs.	417_ESCON Module 50/5
134_GPX 26 A/C	3	396_ENC SCH16F	418_ESCON 50/5
135_GPX 26 LN/LZ	3	404_ENC 30 HEDL 5540	424_EPOS2 24/2 (DC/EC)
136_GPX 26 HP	4	407_ENC AEDL 5810	424_EPOS2 Module 36/2
			425_EPOS2 50/5
			428_EPOS2 P 24/5
			435_MAXPOS 50/5

Configuration

Bearing: Ball bearings preloaded/sleeve bearings
Commutation: Precious metal brushes with or without CLL/graphite brushes/EMI filter
Flange front/back: Standard flange/configurable flange/no flange
Shaft front/back: Length/diameter/flat face
Electric connection: Terminals or cable/alignment of connection/cable length/connector type

xdrives.maxonmotor.com